NAO W

Floor Mount Flushometer Bowl, HET

Spare Parts Sheet

Kit of spare parts for preventive maintenance.

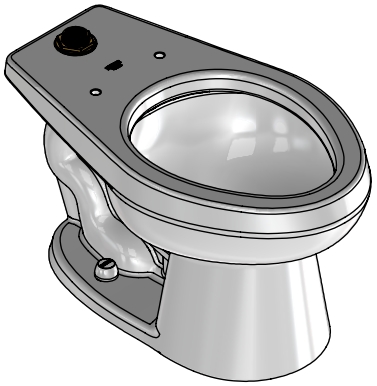

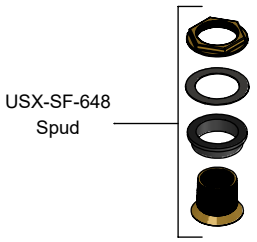

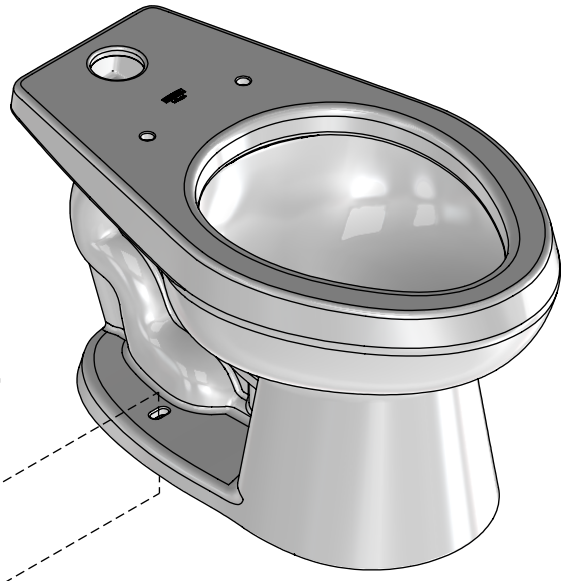

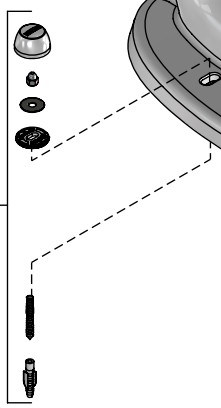

USX-SF-643
Lags Screw Cover Kit Tank
Toilet/Flux Toilet

Technical Support and Service
technicalservice@helvexusa.com
Toll Free Number: (210) 394-5686

Customer Service
contact@helvexusa.com
Toll Free Number: (855) 267-2498

Original Spare Parts

The product's illustration may vary in appearance or its parts to the actual product as a result of the ongoing improvement process. This does not imply any liability to the manufacturer.
Visit our website **www.helvexusa.com**

NA